ZERO 12
ENCLOSURE SPECS

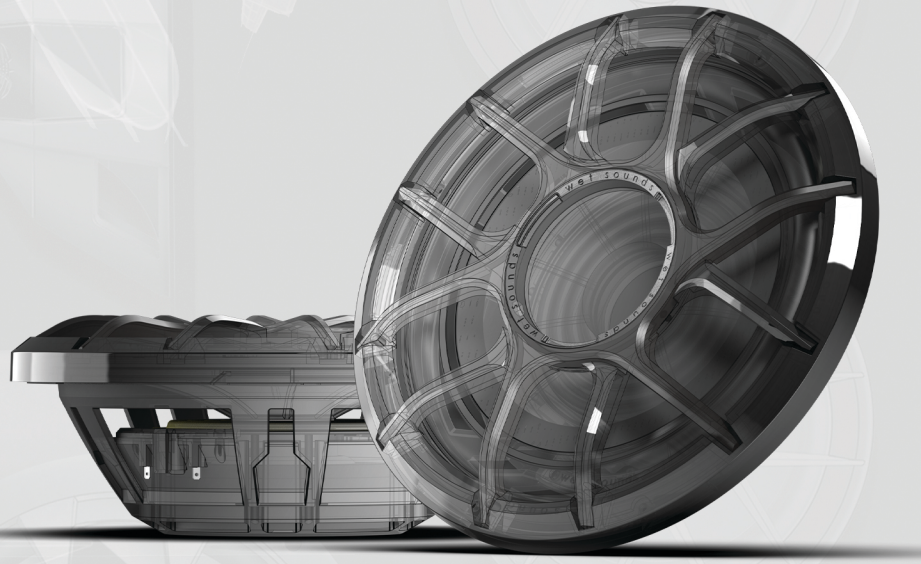

ZERO 12	
Fs	28 Hz
Qts	0.54
Qms	6
Qes	0.59
Vas	68.4 L
Xmax	9.7 mm
Sd	534.8 cm²
Piston Diameter	10.25"
Re	3.3 Ω
Z	4 Ω
SPL	85.9 dB
Pe	400-800W
Le	1.5 mH
BL	13.7 T/m
Mms	189.9 g
Speaker Displacement	.20 ft³
Mounting Diameter	11.13"
Mounting Depth	3.72"
Hvc	27.4 mm
Hag	8 mm
Dvc	2.5"

Box Specs	Sealed	Slot Ported	Round Ported	Free Air
Vb (Net Air Space) *	1 ft³	2 ft³	2 ft³	No
Fb/Q (Box Tuning)	1	40 Hz	40 Hz	
F3 (Output Down 3dB)	44 Hz	41 Hz	41 Hz	
Fo/Fc (Resonance)	52 Hz	51 Hz	51 Hz	
Port Area	N/A	1.5 x 12.50"	(2) 4"	
Port Length	N/A	26.25"	16.875"	
Sub Sonic Filter	OFF	30 Hz	30 Hz	

* You must add the size of the port and displacement of the woofer and any bracing to this number

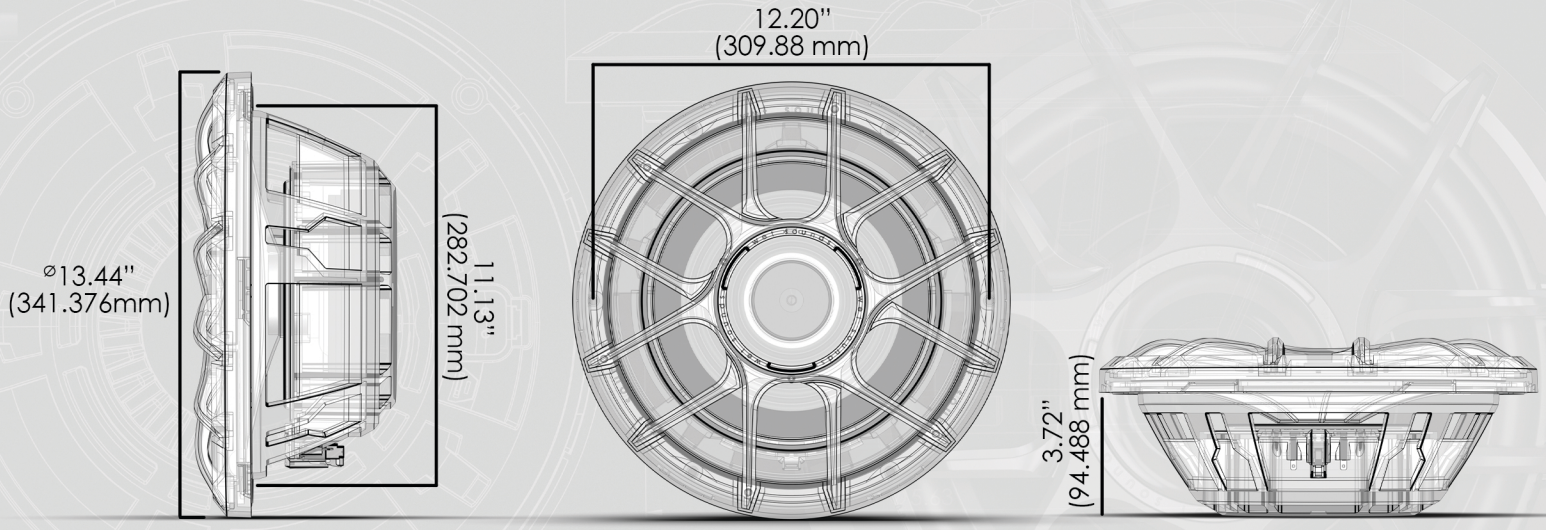

ZERO 12
ENCLOSURE SPECS

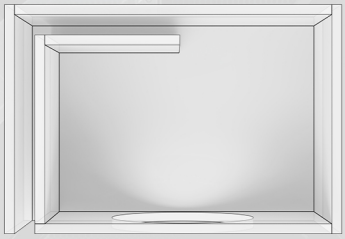

TOP VIEW (shown with top off)

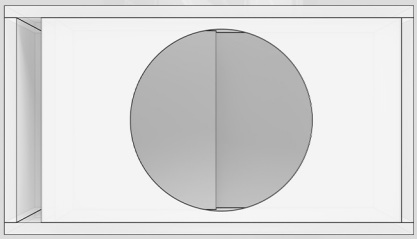

FRONT VIEW

2.0 ft³ Ported Cut List

- (2) 25" x 17"
- (2) 12.5" x 17"
- (1) 12.5" x 23.5"
- (1) 12.5" x 22"
- (1) 12.5" x 14"
- (1) 12.5" x 10"

SIDE VIEW

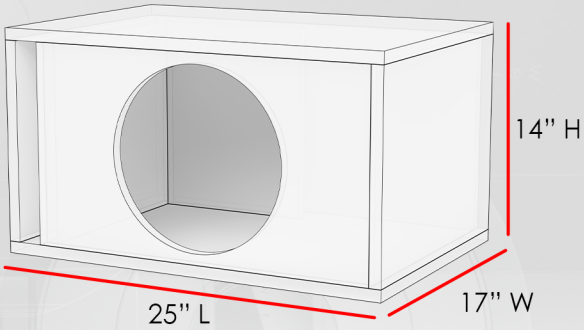

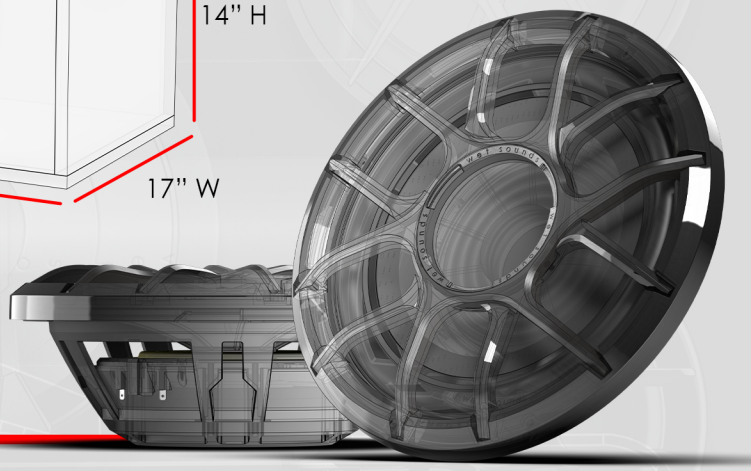

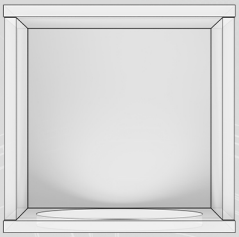

TOP VIEW (shown with top off)

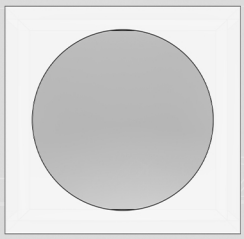

FRONT VIEW

1.0 ft³ Sealed Cut List

- (2) 14.5" x 14"
- (2) 14.5" x 12.75"
- (2) 12.5" x 12.75"

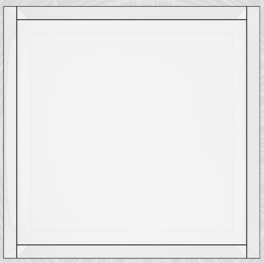
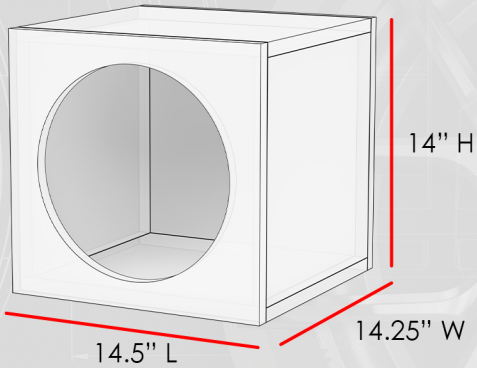
SIDE VIEW