ZERO 10
ENCLOSURE SPECS

ZERO 10	
Fs	30 Hz
Qts	0.52
Qms	6
Qes	0.56
Vas	32.2 L
Xmax	8.2 mm
Sd	369.8 cm²
Piston Diameter	8.5"
Re	3.2 Ω
Z	4 Ω
SPL	84.2 dB
Pe	300-600W
Le	1.3 mH
BL	12.8 T/m
Mms	153.3 g
Speaker Displacement	.08 ft³
Mounting Diameter	9.24"
Mounting Depth	3.57"
Hvc	24.4 mm
Hag	8 mm
Dvc	2"

Box Specs	Sealed	Slot Ported	Round Ported	Free Air
Vb (Net Air Space) *	0.5 ft³	1 ft³	1 ft³	No
Fb/Q (Box Tuning)	0.97	42 Hz	42 Hz	
F3 (Output Down 3dB)	48 Hz	43 Hz	43 Hz	
Fo/Fc (Resonance)	56 Hz	55 Hz	55 Hz	
Port Area	N/A	1.25 x 10.50"	4"	
Port Length	N/A	16.125"	16.125"	
Sub Sonic Filter	OFF	32 Hz	32 Hz	

* You must add the size of the port and displacement of the woofer and any bracing to this number

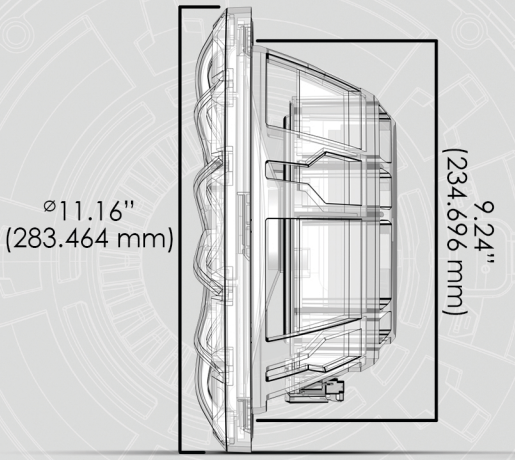

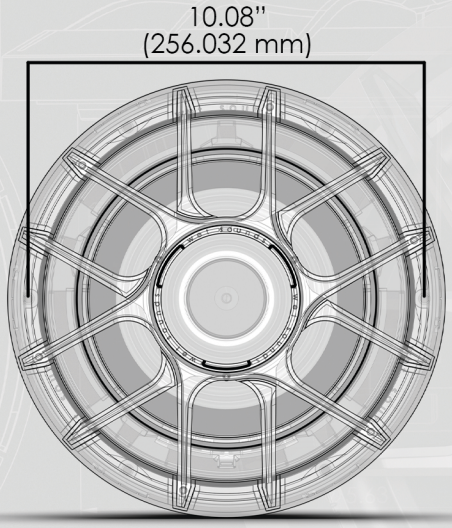

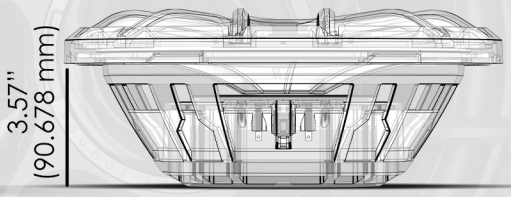

ZERO 10
ENCLOSURE SPECS

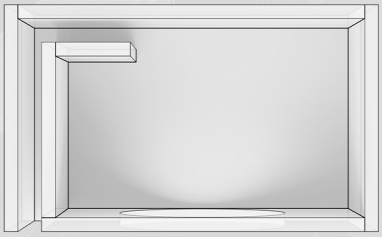

TOP VIEW (shown with top off)

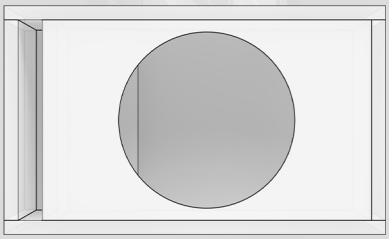

FRONT VIEW

1.0 ft³ Ported Cut List

- (2) 20" x 12.125"
- (2) 10.5" x 12.125"
- (1) 10.5" x 18.5"
- (1) 10.5" x 17.25"
- (1) 10.5" x 9.375"
- (1) 10.5" x 4"

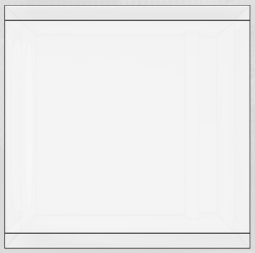

SIDE VIEW

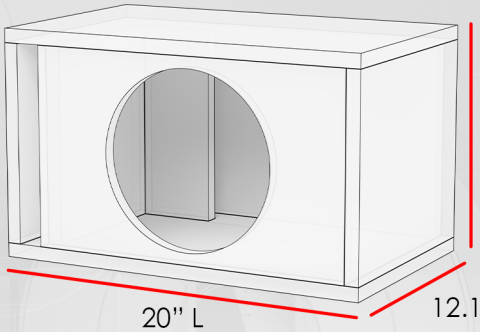

TOP VIEW (shown with top off)

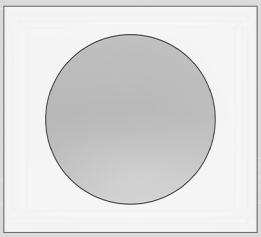

FRONT VIEW

.5 ft³ Sealed Cut List

- (2) 14" x 12.5"
- (2) 14" x 8.25"
- (2) 11" x 8.25"
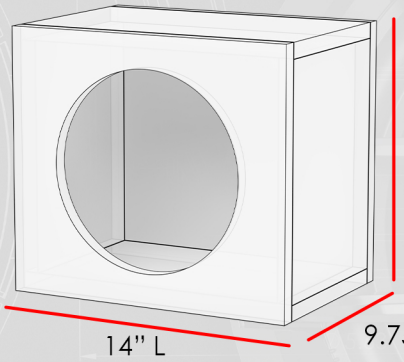
SIDE VIEW