REVO 12 HP
ENCLOSURE SPECS

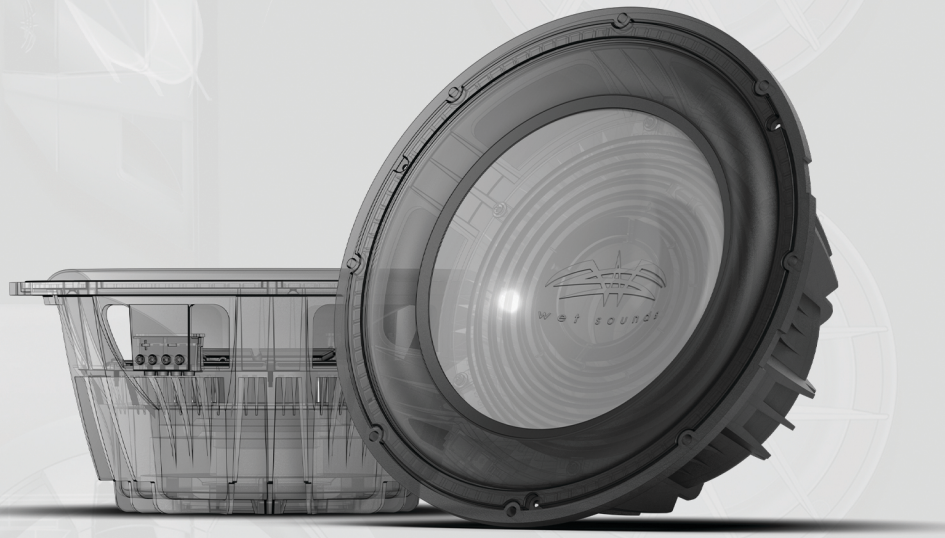

REVO 12 HP Specs

Fs	35 Hz
Qts	0.51
Qms	5.2
Qes	0.56
Vas	34.7 L
Xmax	11 mm
Sd	483.1 cm²
Piston Diameter	10"
Re	3.6 Ω
Z	4 Ω
SPL	86.1 dB
Pe	500-1000W
Le	4.5 mH
BL	16.5 T/m
Mms	195.1 g
Speaker Displacement	.18 ft³
Mounting Diameter	11.08"
Mounting Depth	5.33"
Hvc	27.1 mm
Hag	8 mm
Dvc	2.5"

Box Specs	Sealed	Slot Ported	Round Ported	Free Air
Vb (Net Air Space) *	0.8 ft³	2.0 ft³	2.0 ft³	No
Fb/Q (Box Tuning)	0.81	39 Hz	39 Hz	
F3 (Output Down 3dB)	50 Hz	36 Hz	36 Hz	
Fo/Fc (Resonance)	56 Hz	46 Hz	46 Hz	
Port Area	N/A	1.75 x 12"	4"	
Port Length	N/A	14.625"	8"	
Sub Sonic Filter	OFF	33 Hz	33 Hz	

* You must add the size of the port and displacement of the woofer and any bracing to this number

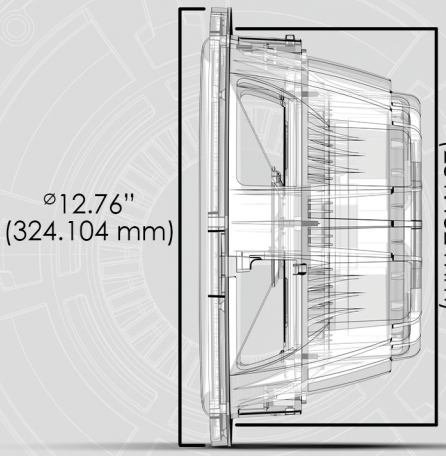

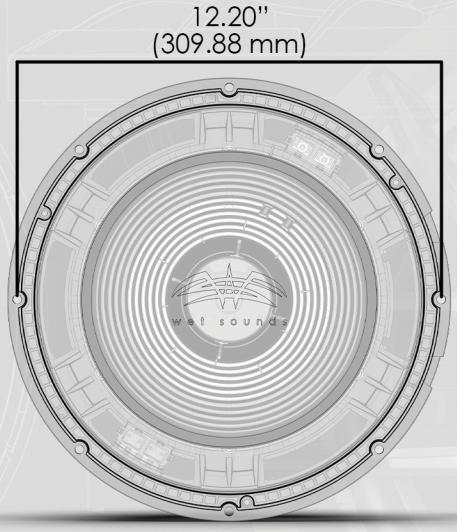

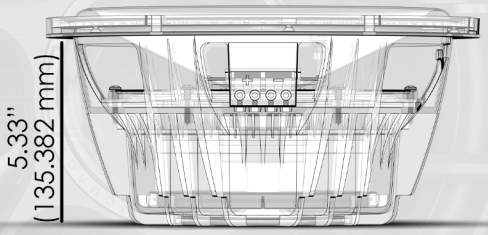

REVO 12 HP
ENCLOSURE SPECS

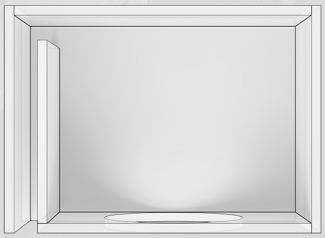

TOP VIEW (shown with top off)

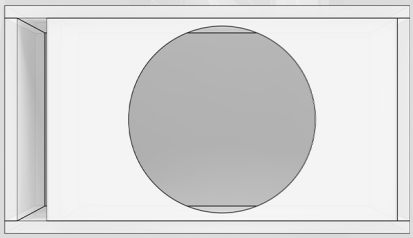

FRONT VIEW

2.0 ft³ Ported Cut List

- (2) 24" x 17.25"
- (2) 12" x 17.25"
- (1) 12" x 22.5"
- (1) 12" x 20.75"
- (1) 12" x 13.875"

SIDE VIEW

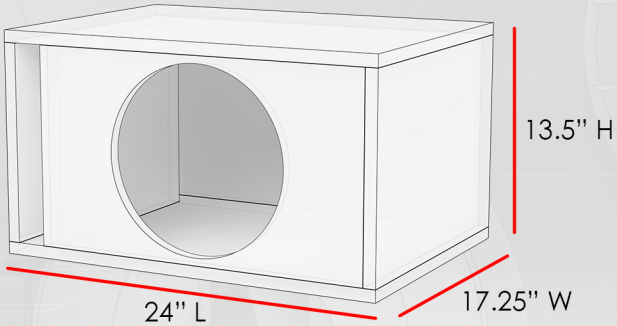

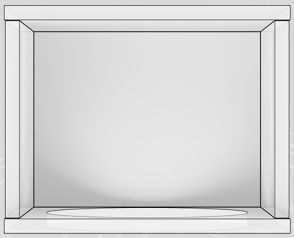

TOP VIEW (shown with top off)

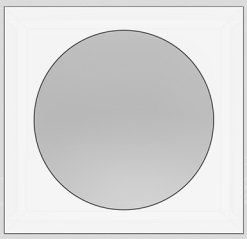

FRONT VIEW

.8 ft³ Sealed Cut List

- (2) 14.75" x 14"
- (2) 14.75" x 10.25"
- (2) 12.5" x 10.25"

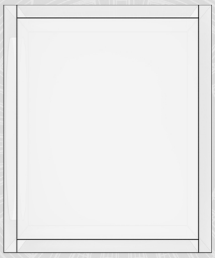
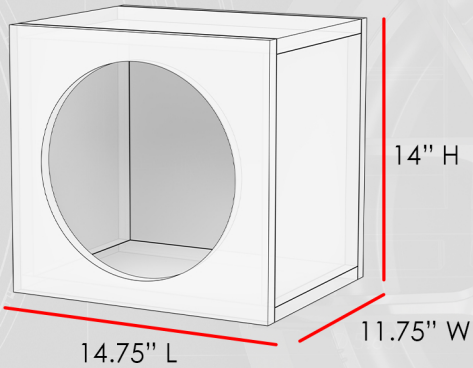
SIDE VIEW