REVO 10 FA 2Ω
ENCLOSURE SPECS

REVO 10 FA 2Ω Specs

Fs	45 Hz
Qts	0.67
Qms	5.8
Qes	0.78
Vas	23.2 L
Xmax	10.1 mm
Sd	369.8 cm^2
Piston Diameter	8.5"
Re	1.8 Ω
Z	2 Ω
SPL	86.2 dB
Pe	300-600W
Le	0.7 mH
BL	8.2 T/m
Mms	103.4 g
Speaker Displacement	.11 ft^3
Mounting Diameter	9.36"
Mounting Depth	4.63"
Hvc	25.6 mm
Hag	8 mm
Dvc	2"

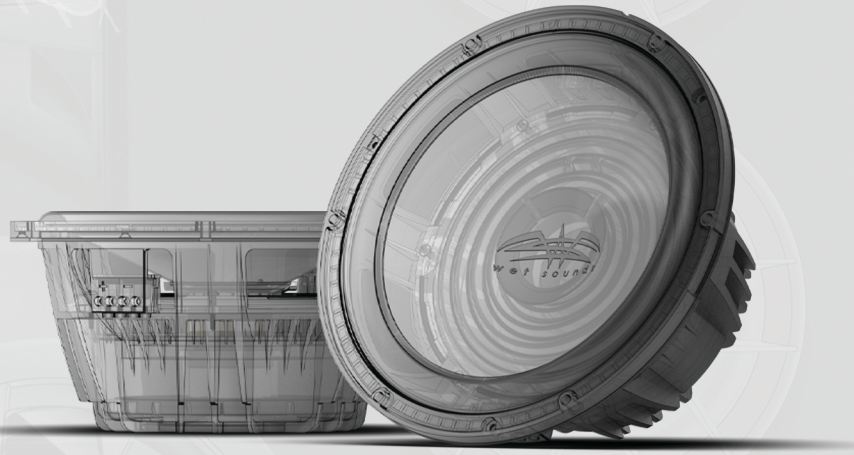

Box Specs	Sealed	Slot Ported	Round Ported	Free Air
Vb (Net Air Space) *	1.3 - 3.5 ft^3	N/A	N/A	Yes
Fb/Q (Box Tuning)	.85 - .81			
F3 (Output Down 3dB)	51 - 45 Hz			
Fo/Fc (Resonance)	57 - 50 Hz			
Port Area	N/A			
Port Length	N/A			
Sub Sonic Filter	30 Hz			

* You must add the size of the port and displacement of the woofer and any bracing to this number

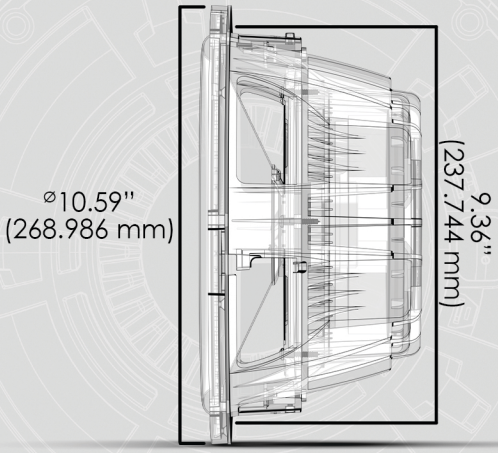

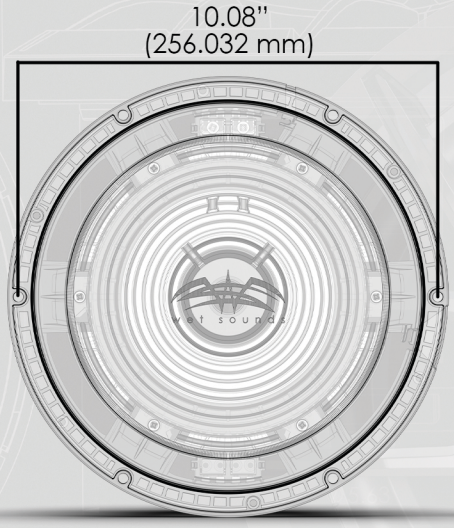

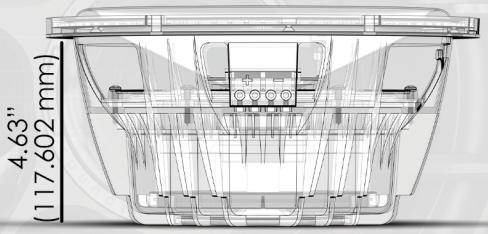

REVO 10 FA 2Ω
ENCLOSURE SPECS

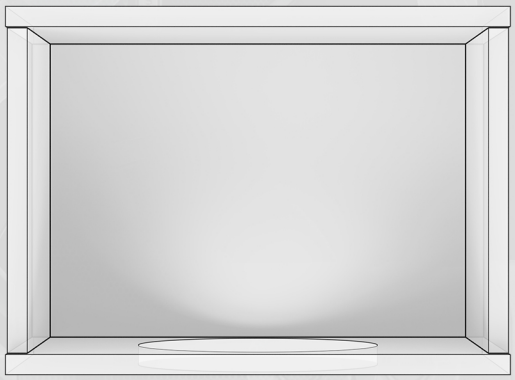

TOP VIEW (shown with top off)

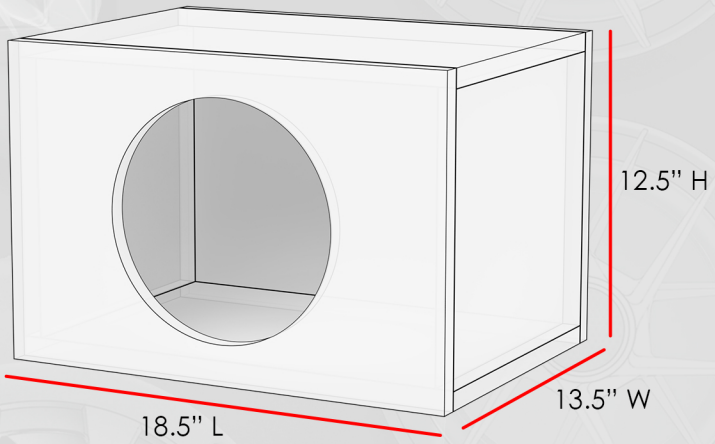

REVO 10 FA 1.3 ft³ Sealed

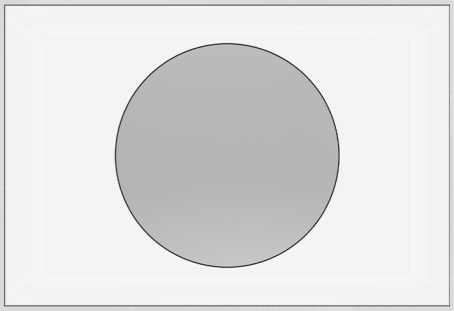

FRONT VIEW

SIDE VIEW

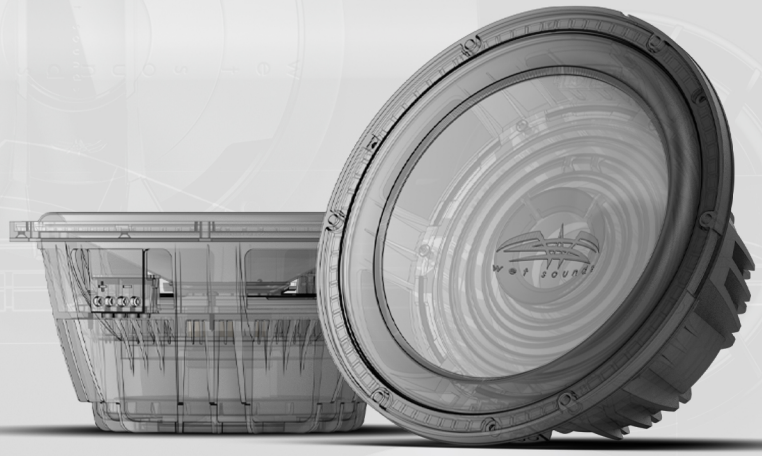

CUT LIST

- (2) 18.5" x 12.5"
- (2) 18.5" x 12"
- (2) 11" x 12"